FAIRMONT STATE UNIVERSITY
MARION COUNTY, WEST VIRGINIA

FSU – ROOF RENEWAL – AEROSPACE

ADDENDUM #2

MARCH 13, 2025

THRASHER PROJECT #T60-11236

TO WHOM IT MAY CONCERN:

A Pre-Bid Conference was held on Tuesday, March 4, 2025, on the above-referenced project, a copy of the sign in sheet is included in this Addendum. The following are clarifications and responses to questions posed by contractors for the above-referenced project.

A. SPECIFICATIONS

1. **REPLACE** Bid form.
2. **ADD** Specification Section 012300 ALTERNATES
3. **ADD** Specification Section 074113 METAL ROOF PANELS.

B. DRAWINGS

1. **OMIT** A5.03.
2. **REPLACE** A5.01 with A5.01R as attached to this Addendum. New Batt insulation to be included in Base Bid.

C. QUESTIONS AND RESPONSES

QUESTION 1. What is the budget for the project?
RESPONSE 1. The University has a set budget for preferred maintenance across multiple projects. A set budget amount for each project has not been identified.

QUESTION 2. What are the work hours that the contractor will be able to work with the roof deck open? How early can they move planes out and how late can they move them back in?
RESPONSE 2. Work hours would be from 7am to 7pm. Depending on scheduling and which Hanger you are working in it could be limited to 7am to 5pm based on the timing to move the planes. If Alternate #1 is accepted working hours could be from sun-up to sun-down.

QUESTION 3. There will be dust and small particles of insulation falling inside of the buildings daily from demolition. Who is responsible for cleaning this up and when?
RESPONSE 3. The contractor is responsible for keeping a clean site during construction. This includes cleaning up debris that falls in the interior of the building.

QUESTION 4. The insulation that is to remain in hanger B will possibly be unusable if the facing is brittle and the material falls apart when the existing roof deck is removed. How will this be handled?
RESPONSE 4. If it is determined that the insulation will need to be replaced, notify the Architect and Owner. It will be taken into consideration and processed as a change order if deemed necessary.

QUESTION 5. With the lead time on the specified material and possibly limited production caused by available hours of work and weather delays you may want to add at least 60 days to time of completion.
RESPONSE 5. If lead time on materials is an issue document it and provide supplemental information indicating the delay, an extension of time will be considered as a non-cost change order for the time delay.

QUESTION 6. Do you have drawings of hanger "A"? If not, can you provide dimensions of the parapet cap?
RESPONSE 6. The drawing 8/A5.01 is the most accurate depiction of the gutter detail. Original drawings do not show existing counter flashing. Please see below for photos of the existing gutter. The parapet cap is approximately 14" wide. GC to verify in field.

QUESTION 7. Can you provide sizes of curbs that need to be replaced?
RESPONSE 7. Assume (2) 3'x 3', (2) 4'x 5', and (2) 6' x 6' curbs. GC to verify in field.

QUESTION 8. On drawing 1/A5.03 it says "see alternate 1" in regard to insulation. I don't see an alternate on the bid form. Please advise.
RESPONSE 8. See DRAWINGS #1 & 2. See SPECIFICATIONS #1&2 for revised Bid Form and Alternates.

QUESTION 9. Can any other metal building companies be used for roof system? Hanger B is a Ceco building that was built in 2003. Can Ceco or Nucor (American's Parent Company) be approved?
RESPONSE 9. Ceco or Nucor would be an approved for the replacement roof system.

QUESTION 10. Are there specifications on the insulation and the liner system to be used? Would you consider using a sag and bag insulation system? This would save a substantial amount of money in material and labor.
RESPONSE 10. A sag and bag insulation system would be acceptable f.

QUESTION 11. Is this job under Davis Bacon Wages?
RESPONSE 11. There are no Davis Bacon Wages on this project.

If you have any questions or comments, please feel free to contact me at your earliest convenience. As a reminder, bids will be received until 2:00 p.m. on Thursday, March 20th, 2025, at Fairmont State University, Education Building Room 303, Fairmont WV 26554. Good luck to everyone and thank you for your interest in the project.

Sincerely,

THE THRASHER GROUP, INC.

Marsha Benson

STATE OF WEST VIRGINIA
MARSHA L. BENSON
No. 5792
REGISTERED ARCHITECT

Marsha Benson
Project Manager

2014 Post Gutter Repair

JANUARY 2025

BID FORM FOR CONSTRUCTION CONTRACT

The terms used in this Bid with initial capital letters have the meanings stated in the Instructions to Bidders, the General Conditions, and the Supplementary Conditions.

ARTICLE 1—OWNER AND BIDDER

1.01 This Bid is submitted to:

Fairmont State University
1201 Locust Ave.
Fairmont, WV 26554

1.02 The undersigned Bidder proposes and agrees, if this Bid is accepted, to enter into an Agreement with Owner in the form included in the Bidding Documents to perform all Work as specified or indicated in the Bidding Documents for the prices and within the times indicated in this Bid and in accordance with the other terms and conditions of the Bidding Documents.

ARTICLE 2—ATTACHMENTS TO THIS BID

2.01 The following documents are submitted with and made a condition of this Bid:

A. Bid Opening Requirements

ARTICLE 3—BASIS OF BID—LUMP SUM BID AND UNIT PRICES

GENERAL

The Bidder shall take notice of and shall be responsible for any local or state taxes levied and applicable, and the cost for the same shall be included as part of the submitted Bid.

The total Bid cost stated includes a complete operating installation including furnishing and installation of any and all changes or additions in plans, piping, mechanical work, additional electrical work, accessories, controls, etc. necessary to accommodate alternative equipment systems or materials used in construction.

BID PROPOSAL

The Bidder agrees to perform all required Work described in the detailed Specifications and as shown on the Plans for the complete construction and placing in satisfactory operation the FSU – Roof Replacements. The Project "Sequence of Construction" has been detailed in the Drawings and Specification Division 1, Project Summary, Section 011000. The Bidder agrees to perform all the Work proposed for the total of the following Bid prices.

3.01 *Lump Sum Bids*

A. Bidder will complete the Work in accordance with the Contract Documents for the lump sum (stipulated) price(s), shown in the bid schedule.

B. Lump Sum Bids may be one of the following:

1. Lump Sum Price (Single Lump Sum)

2. Lump Sum Price (Base Bid and Alternates)

3. Lump Sum Price (Sectional Lump Sum Bids)

C. All specified cash allowance(s) are included in the price(s) set forth in the bid schedule, and have been computed in accordance with Paragraph 3.8 of the General Conditions.

D. All specified contingency allowances are included in the price(s) set forth in the bid schedule, and have been computed in accordance with Paragraph 3.8 of the General Conditions.

Revised per Addendum #2
March 13, 2025

BID SCHEDULE

PROPOSED
ROOF RENEWALS: AEROSPACE
FOR

FAIRMONT STATE UNIVERSITY
MARION COUNTY, WEST VIRGINIA

3.02 Total Bid Price Lump Sum

LUMP SUM BID

Item #	Qty	UNIT	DESCRIPTION	TOTAL PRICE
1	1	LS	*Provide all labor, materials, equipment, fees, bonds, insurance and taxes to perform the work as detailed in the plans and specifications and addenda.* *(Allowances based on Unit Prices to be included in base bid total)*	

TOTAL BID: _____
(Written in Words)

(Amounts are to be shown in both words and figures. In case of discrepancy, the amount shown in words will govern.)

ALTERNATES

See full descriptions in Specification Section 012300 Alternates. Indicate additive or deductive in form of (+) or (-) to the total price.

Item #	DESCRIPTION	PRICE WRITTEN IN WORDS	TOTAL PRICE
1	**Roof Recover System** *Existing roof and insulation to remain. New Roof Recover System to be installed on top of existing roof.*		
2	**Insulation Liner** *Add metal building insulation liner system to underside of insulation between purlins.*		
3	**Insulation in Hanger A** *Remove and replace insulation in Hanger A.*		

(Amounts are to be shown in both words and figures. In case of discrepancy, the amount shown in words will govern.)

3.02 *Method of Award*

Method of Award = Lowest Qualified Bidder

If at the time this contract is to be awarded, the lowest total bid submitted by a qualified, responsive, responsible Bidder does not exceed the amount of funds then estimated by the Owner, as available to finance the contract, the construction contract will be awarded. If such bids exceeds such amount, the owner may reject all bids.

A. Unit prices have been computed in accordance with paragraph 13.03.A of the General Conditions.

B. Bidder acknowledges that estimated quantities are not guaranteed, and are solely for the purpose of comparison of Bids, and final payment for all Unit Price Bid items will be based on actual quantities, determined as provided in the Contract Documents.

~~ARTICLE 4—BASIS OF BID—COST-PLUS FEE~~

Deleted

~~ARTICLE 5—PRICE-PLUS-TIME BID~~

Deleted

ARTICLE 6—TIME OF COMPLETION

6.01 Bidder agrees that the Work will be substantially complete and will be completed and ready for final payment in accordance with Article 8 of the General Conditions on or before the dates or within the number of calendar days indicated in the Agreement.

6.02 Bidder accepts the provisions of the Agreement as to liquidated damages.

ARTICLE 7—BIDDER'S ACKNOWLEDGEMENTS: ACCEPTANCE PERIOD, INSTRUCTIONS, AND RECEIPT OF ADDENDA

7.01 *Bid Acceptance Period*

A. This Bid will remain subject to acceptance for 90 days after the Bid opening, or for such longer period of time that Bidder may agree to in writing upon request of Owner.

7.02 *Instructions to Bidders*

A. Bidder accepts all of the terms and conditions of the Instructions to Bidders, including without limitation those dealing with the disposition of Bid security.

ARTICLE 8—BIDDER'S REPRESENTATIONS AND CERTIFICATIONS

8.01 *Bidder's Representations*

A. In submitting this Bid, Bidder represents the following:

1. Bidder has examined and carefully studied the Bidding Documents, including Addenda.

2. Bidder has visited the Site, conducted a thorough visual examination of the Site and adjacent areas, and become familiar with the general, local, and Site conditions that may affect cost, progress, and performance of the Work.
3. Bidder is familiar with all Laws and Regulations that may affect cost, progress, and performance of the Work**.**
4. Bidder has carefully studied the reports of explorations and tests of subsurface conditions at or adjacent to the Site and the drawings of physical conditions relating to existing surface or subsurface structures at the Site that have been identified in the Supplementary Conditions, with respect to the Technical Data in such reports and drawings.
5. Bidder has carefully studied the reports and drawings relating to Hazardous Environmental Conditions, if any, at or adjacent to the Site that have been identified in the Supplementary Conditions, with respect to Technical Data in such reports and drawings.
6. Bidder has considered the information known to Bidder itself; information commonly known to contractors doing business in the locality of the Site; information and observations obtained from visits to the Site; the Bidding Documents; and the Technical Data identified in the Supplementary Conditions or by definition, with respect to the effect of such information, observations, and Technical Data on (a) the cost, progress, and performance of the Work; (b) the means, methods, techniques, sequences, and procedures of construction to be employed by Bidder, if selected as Contractor; and (c) Bidder's (Contractor's) safety precautions and programs.
7. Based on the information and observations referred to in the preceding paragraph, Bidder agrees that no further examinations, investigations, explorations, tests, studies, or data are necessary for the performance of the Work at the Contract Price, within the Contract Times, and in accordance with the other terms and conditions of the Contract.
8. Bidder is aware of the general nature of work to be performed by Owner and others at the Site that relates to the Work as indicated in the Bidding Documents.
9. Bidder has given Engineer written notice of all conflicts, errors, ambiguities, or discrepancies that Bidder has discovered in the Bidding Documents, and of discrepancies between Site conditions and the Contract Documents, and the written resolution thereof by Engineer is acceptable to Contractor.
10. The Bidding Documents are generally sufficient to indicate and convey understanding of all terms and conditions for performance and furnishing of the Work.
11. The submission of this Bid constitutes an incontrovertible representation by Bidder that without exception the Bid and all prices in the Bid are premised upon performing and furnishing the Work required by the Bidding Documents.

8.02 *Bidder's Certifications*

A. The Bidder certifies the following:

1. This Bid is genuine and not made in the interest of or on behalf of any undisclosed individual or entity and is not submitted in conformity with any collusive agreement or rules of any group, association, organization, or corporation.
2. Bidder has not directly or indirectly induced or solicited any other Bidder to submit a false or sham Bid.
3. Bidder has not solicited or induced any individual or entity to refrain from bidding.

4. Bidder has not engaged in corrupt, fraudulent, collusive, or coercive practices in competing for the Contract. For the purposes of this Paragraph 8.02.A:

   a. Corrupt practice means the offering, giving, receiving, or soliciting of anything of value likely to influence the action of a public official in the bidding process.

   b. Fraudulent practice means an intentional misrepresentation of facts made (a) to influence the bidding process to the detriment of Owner, (b) to establish bid prices at artificial non-competitive levels, or (c) to deprive Owner of the benefits of free and open competition.

   c. Collusive practice means a scheme or arrangement between two or more Bidders, with or without the knowledge of Owner, a purpose of which is to establish bid prices at artificial, non-competitive levels.

   d. Coercive practice means harming or threatening to harm, directly or indirectly, persons or their property to influence their participation in the bidding process or affect the execution of the Contract.

BIDDER hereby submits this Bid as set forth above:

Bidder:

_____
(typed or printed name of organization)

By: _____
(individual's signature)

Name: _____
(typed or printed)

Title: _____
(typed or printed)

Date: _____
(typed or printed)

If Bidder is a corporation, a partnership, or a joint venture, attach evidence of authority to sign.

Attest: _____
(individual's signature)

Name: _____
(typed or printed)

Title: _____
(typed or printed)

Date: _____
(typed or printed)

Address for giving notices:

_____

_____

Bidder's Contact:

Name: _____
(typed or printed)

Title: _____
(typed or printed)

Phone: _____

Email: _____

Address:

_____

_____

_____

Bidder's Contractor License No.: (if applicable) _____

SECTION 012300 – ALTERNATES

PART 1 - GENERAL

1.1 SUMMARY

A. Section includes administrative and procedural requirements for alternates. Alternates will be taken in the scheduled order.

1.2 DEFINITIONS

A. Alternate: An amount proposed by bidders and stated on the Bid Form for certain work defined in the bidding requirements that may be added to or deducted from the base bid amount if the Owner decides to accept a corresponding change either in the amount of construction to be completed or in the products, materials, equipment, systems, or installation methods described in the Contract Documents.

1. Alternates described in this Section are part of the Work only if enumerated in the Agreement.
2. The cost or credit for each alternate is the net addition to or deduction from the Contract Sum to incorporate alternates into the Work. No other adjustments are made to the Contract Sum.

1.3 PROCEDURES

A. Coordination: Revise or adjust affected adjacent work as necessary to completely integrate work of the alternate into Project.

1. Include as part of each alternate, miscellaneous devices, accessory objects, and similar items incidental to or required for a complete installation whether or not indicated as part of alternate.

B. Execute accepted alternates under the same conditions as other work of the Contract.

C. Schedule: A schedule of alternates is included at the end of this Section. Specification Sections referenced in schedule contain requirements for materials necessary to achieve the work described under each alternate.

PART 2 - PRODUCTS (Not Used)

PART 3 - EXECUTION

3.1 SCHEDULE OF ALTERNATES

A. Alternate No. 1: Roof Recover System

1. Base Bid: Includes the demolition of the existing roof system with a complete metal roof replacement, associated metal accessories, and new 3 ½" batt fiberglass insulation in liner system. See drawings.
2. Alternate: Exclude the demolition of the existing roof and insulation; they are to remain intact. A new roof recover system to be installed on existing roof with 4" of batt insulation between new and existing roof. See Specification section 074113 METAL ROOF PANELS.

B. Alternate No. 2: Insulation Liner

1. Alternate 1: Maintain the existing insulation.
2. Alternate 2: Add metal building insulation liner system attached to underside of existing insulation between each purlin on both Hangers.

C. Alternate No. 3: Insulation in Hanger A

1. Alternate 2: Maintain the existing insulation with a new insulation liner system.
2. Alternate 3: In Hanger A remove existing insulation. Replace the insulation with a min. 3 ½" Batt insulation (min R15).

END OF SECTION 012300

SECTION 074113 - METAL ROOF PANELS

PART 1 - GENERAL

1.1 SUMMARY

A. Section Includes:
   1. Standing-seam metal roof panels, including trim and accessories

1.2 REFERENCES

A. AISI S-100 – North American Specification for the Design of Cold-Formed Steel Structural Members.

B. ASCE-7: American Society of Civil Engineers -Minimum Design Loads for Buildings and Other Structures; version adopted by local Building Code authority having jurisdiction.

C. ASTM A792 - Specification for Steel Sheet, 55% Aluminum-Zinc Alloy-Coated by the Hot-Dip Process.

D. ASTM E1592 - Standard Test Method for Structural Performance of Sheet Metal Roof and Siding System by Uniform Static Air Pressure Difference

E. ASTM E1646 - Standard Test Method for Rate of Water Penetration Through Exterior Metal Roof Panel Systems By Uniform Static Air Pressure Difference.

F. ASTM E1680 - Standard Test Method for Rate of Air Leakage Through Exterior Metal Roof Panel Systems.

G. ASTM E2140 - Standard Test method for water penetration of metal roof panel systems by static water pressure head.

1.3 PREINSTALLATION MEETINGS

A. Preinstallation Conference: Conduct conference at Project site.
   1. Schedule meeting to discuss roof project requirements, substrate conditions, manufacturer's installation instructions, and manufacturer's warranty requirements before start of work onsite.
   2. Required attendees: Contractor & roof installer, and any other subcontractors who have equipment penetrating the roof or Work that requires roof access or traffic.

1.4 ACTION SUBMITTALS

A. Product Data: Manufacturer literature indicating product specifications, installation instructions, and standard construction details for specified products.

B. Shop Drawings: To be prepared by metal roof system manufacturer.
   1. Submit roof plan showing panel layout, profiles, components, accessories, finish colors, gutters and downspouts as applicable.
      a. Indicate layout of roofing panels and roof panel sizes, including custom fabricated roofing panels if indicated, indicate each trim condition.
      b. Include details of each condition of installation, including the locations and types of fasteners, sealants and accessories. Indicate locations, gauges, shapes, and methods of attachment of all panels, accessories and trim.
      c. Indicate products/materials required for construction activities of this section not supplied by manufacturer of products of this section.
      d. Indicate locations of field applied sealant.
      e. Indicate locations of field worked conditions.
   2. Roof Panel Attachment:
      a. Roof plan with wind uplift pressure calculations at field, corner and perimeter areas according to version of ASCE-7 referenced by locally-adopted Building Code and the authority having jurisdiction.
      b. Roof plan indicating roof clip spacing pattern at field, corner, perimeters and where panels are to be fixed from thermal movement.
      c. Roof panel attachment plan must be stamped by licensed engineer in State in which project is constructed, certifying roof attachment meets local Building Code requirements for wind uplift.

C. Samples:
   1. Submit two samples, 12" long, full width panel, showing metal gage, and seam.
   2. Two samples each for roof panel clip, bearing plate , (if required) and clip fastener.
   3. Submit color samples for Architect's selection.
   4. Submit sample warranties:
      a. Manufacturer Finish Warranty
      b. Manufacturer Weathertightness Warranty complying with this Specification
      c. Installer Warranty

1.5 INFORMATIONAL SUBMITTALS

A. Certificates:
   1. Submit roof panel manufacturer's certification that fasteners, clips, backup plates, closures, roof panels and finishes meet the specification requirements.
   2. Submit roof panel manufacturer’s certification that installer meets requirements to install roof system and is qualified to obtain required warranties.

B. Delegated Design Submittals: Submit engineering calculations indicating wind uplift pressure calculations according to local building code for project location with respect to appropriate Importance Factor, Exposure category and Safety Factor. Calculations shall be sealed by a professional engineer licensed to practice structural engineering in the state in which project is located.

C. Test and Evaluation Reports - Certified test results that indicate roof system meets or exceeds design and performance criteria. Testing to include:
   1. ASTM E1680 - Manufacturer’s test data, signed and sealed by a registered professional engineer, for air infiltration rates meeting the following:

a. 18” panel width - 0.0025 cfm/sf maximum at a differential pressure of +/-20 pounds per square foot.

2. ASTME1646 - Manufacturer’s test data, signed and sealed by a registered professional engineer, indicating no water penetration up to 20 pounds per square foot differential pressure.
3. ASTM E1592 - Manufacturers test data, signed and sealed by a registered professional engineer, substantiating that roof system will meet the allowable wind pressures using an appropriate Factor of Safety in accordance with AISI S-100.
4. ASTM E2140 - Manufacturers test data, signed and sealed by a registered professional engineer, on a test specimen with no end lap, indicating that no water leakage was observed during the testing period of 6 hours with a 6” water head on the specimen.

D. Qualification Statements: For Manufacturer and Installer.

1.6 CLOSEOUT SUBMITTALS

A. Operation and Maintenance Data: Manual indicating requirements and recommendations, to maintain the roof system, in good working condition.

B. Warranty Documentation: Submit final warranties required in this section.

1.7 QUALITY ASSURANCE

A. Qualifications:
1. Manufacturer Qualifications: Manufacturer shall have a minimum of ten years experience in the manufacturing of metal roof systems similar to those required for this project. Manufacturer must have a current installer training program.
2. Installer Qualifications: Installer ("roofer") to perform the work of this section, shall have no fewer than 5 years of successful experience with the installation of metal roof systems similar to those required for this project. The installer shall be certified and qualified by the roof panel manufacturer for installation of manufacturer-warranted systems.

B. Field Measurements: Prior to fabrication of panels, take field measurements of structure or substrates to receive panel system. Allow for trimming panel units, where final dimensions cannot be established prior to fabrication.

C. Mock-Ups: Install a 30 foot wide, quality control area of metal roofing, for review by the Architect. The Architect shall approve the quality of installation for the roof, prior to installing additional metal panels.

1.8 DELIVERY, STORAGE AND HANDLING

A. Delivery and Acceptance Requirements: Deliver coil and accessories to jobsite properly packaged to provide protection against transportation damage. Panels shall be site formed using New Tech SSQ with proper tooling.

B. Storage and Handling Requirements:

1. Exercise care in manufacturing, loading, storing and erecting panels to prevent bending, warping, twisting, and surface damage.
2. Store all material and accessories above ground on well skidded platforms. Store under waterproof covering. Provide proper ventilation to panels to prevent condensation build-up between each panel.
3. Remove from site and replace panels which are damaged, or become water-stained during storage and handling.

1.9 WARRANTY

A. Manufacturer Warranties:
1. Panel Material: Furnish manufacturer's warranty covering the panel against rupture, structural failure, or perforation for the following time periods
   a. 45 years if acrylic coating is used
   b. 50 years if prefinished with PVF2 paint system
2. Panel Coating: Furnish manufacturer's 40-year warranty panel coating warranty covering cracking, checking, and peeling, and 30 year warranty covering fade and chalk.
3. Metal Roof Weathertightness Warranty:
   a. Manufacturer's Joint Weathertightness Warranty
      1) Warranty term: 20 years commencing on date of substantial completion.
      2) Total manufacturer's liability NRL (No Repair Limit).
      3) Warranty must cover: Pipe and Curb Penetrations
         a) Pipes must be centered in pan or a pipe curb must be used. Pipe must be flashed with an EPDM dektite.
         b) Curbs must be all welded aluminum or stainless steel.

PART 2 - PRODUCTS

2.1 ROOF PANEL SYSTEM

A. Basis of Design: Trap Tee by McElroy Metal, Inc. Bossier City, LA, or approved substitute.

B. Substitution Limitations
1. Requests for approval must be submitted in writing at least ten (10) days prior to bid date, and are accompanied by all related test reports and design calculations listed in Section 1.4 and Design and Performance criteria Section 2.2.
2. Substitute manufactures will be approved by written addendum to all bidders. Voluntary alternates will not be considered. Substitutions will not be permitted after the bid date of this project.
3. Roof panels proposed for substitution shall fully comply with specified requirements in appearance, assembly, and performance.

C. Product Options
1. Site -formed panel, width of 18 inches. Panels shall be symmetrical in design and shall be mechanically seamed with a field operated electric seaming machine approved by the manufacturer.
2. Minimum seam height 2 3/4 inches. Integral seam, double lock and snap together type panels are not acceptable

3. Seam cap matching panel finish with two rows of integral factory hot applied sealant. Sealant should not come in contact with clip, and clip should not require sealant to maintain a weathertight condition.
4. Galvalume steel sheet conforming to ASTM A792, AZ55 coating for bare; AZ50 coating for painted; 24 gauge sheet thickness.
5. Finish:
   a. Two coat coil applied, baked-on full-strength (70% resin, PVDF) fluorocarbon coating consisting of a nominal 0.25 mil dry film thickness primer, and a nominal dry film thickness of 0.7 - 0.8 mil color coat for a total 0.9 to 1.1 mil total system dry film thickness. Finish to be selected from manufacturer's standard color selection. The back side of the material should be 0.25 mil primer and 0.25 mil polyester wash coat.
6. Roof panel system must allow individual roof panel removal and replacement from any point on the roof without damage to adjacent roof panel(s).
7. Roof panel system must be approved by manufacturer to be installed on slopes as low as 1/4:12.
8. Panels must be furnished and installed in continuous lengths from ridge to eave with no overlaps. Panels will be manufactured on site using New Tech SSQ roll former with proprietary tooling.
9. Panel surface characteristics to be two 3 inch wide minor ribs.
10. Manufacturer weathertightness warranty meeting requirements of this Section.

2.2 PERFORMANCE/DESIGN CRITERIA

A. Thermal Movement: Metal Roofing system, including flashing, shall accommodate unlimited thermal movement without buckling or excess stress on the structure.

B. Roof panel and trim attachments will be designed to satisfy the requirements of the roof design (shown in shop drawings).

C. Maximum wind uplift capacity of roof system shall be determined using ASTM E 1592 test results, with an appropriate Factor of Safety in accordance with AISI S-100.

D. Panel system shall be designed in accordance with the local building code and ASCE7 for project location with respect to appropriate Exposure category, Importance Factor and Factor of Safety in accordance with AISI S-100.

2.3 ACCESSORIES

A. Panel Clip Screw - screw required in wind uplift rating requirements and design specification for application, with corrosion-resistant coating, in length necessary to penetrate substrate minimum 3/4 inch., as supplied by roof panel manufacturer.

B. Roof Panel Clip:
   1. Intermittent Clip: 16 gauge galvanized steel, one-piece, designed to allow roof panel thermal movement and not contact roof panel cap, as supplied by roof panel manufacturer, meeting wind uplift requirements and design criteria of this section.
   2. Multi-Span Clip: if required as provided by roof panel manufacturer for full assembly warranted systems.

3. Roof Hugger Retrofit purlin: Model D Roof hugger for 3” x 24” low floating trapezoidal standing seam existing roof. 16 Gauge, Grade 50 G-90 Galvanized.

C. Trim and flashing will be of the same gauge and finish unless approved otherwise by the metal roof system manufacturer.
   1. Ridge closures, consisting of factory stamped metal Zee shaped closure secured through the field of the panel into 16 gauge back up plate.
   2. Trim will be installed specifically as displayed in the manufacturer provided shop drawings. Proposed changes must be approved in writing by the metal roof system manufacturer.

D. Concealed supports, angles, plates, accessories and brackets: gauge and finish as recommended, and furnished by manufacturer.

E. Accessory Screw: Size and screw type as provided by panel manufacturer for each use, with prefinished hex washer head in color to match panels where exposed to view.

F. Rivets: full stainless steel, including mandrel, in size to match application.

G. Field Sealant:
   1. Exposed Sealant: Color coordinated urethane or polymer sealant as supplied by panel manufacturer.
   2. Non-exposed Sealant: Non-curing, non-skinning, butyl tape or tube sealant as supplied by manufacturer.

H. Sealant Tape: non-drying, 100 percent solids, high grade butyl tape, as supplied by panel manufacturer, in sizes to match application.

I. Pipe Penetration Flashings: 20 year warranted flexible boot type, with stainless steel compression ring. Use silicone type at hot pipes.

J. Metal Roof Curbs: 0.063 minimum thickness welded aluminum, or 18 gauge minimum welded stainless steel, factory-insulated, with integral cricket, and designed to fit roof panel module, sized to meet application.

K. Insulation: 4” unfaced batt insulation between two roofs.

PART 3 - EXECUTION

3.1 INSTALLERS

A. Must be certified and qualified by Manufacturer prior to commencement of work.

3.2 EXAMINATION

A. Verification of Conditions
   1. Ensure surfaces are ready for panel application.

2. Inspect and ensure surfaces are free from objectionable warp, wave, and buckle before proceeding with installation of pre-formed metal roofing.
3. Ensure substrate is ready to receive metal roofing. Report items for correction and do not proceed with metal roof panel system installation until resolved.

3.3 PREPARATION

A. Install Roof Hugger retrofit purlins and unfaced batt insulation in accordance with manufacturer's recommendations.

B. Coordinate Work, with installation of other associated Work, to ensure quality application.

C. Coordinate Work with installation of associated metal flashings and building walls.

D. Coordinate Work to minimize foot traffic and construction activity on installed finished surfaces.

E. Coordinate location of pipe penetrations to allow centering of pipe in panel.

F. Coordinate location of roof curbs, to allow proper integration with roof panel seams.

3.4 INSTALLATION

A. Comply with and install roofing and flashings in accordance with all details shown on manufacturer's approved shop drawings and manufacturer's product data, instructions, and installation manuals, within specified erection tolerances.

B. Check substrate for maximum ¼" in 20 feet deflection.

C. Install field panels in continuous lengths, without end laps

D. Do not install panels damaged during fabrication pr handling.

E. Install intermittent clips with bearing plates, if required, and continuous clips, if required, according to the engineered design pattern in the field, perimeter, and corner areas of the roof.

F. Hand crimp cap onto seam at clip locations

G. Fix panels at location depicted on reviewed shop drawing(s).

H. Allow for required panel clearance at penetrations for thermal movement.

I. Install concealed back up plates, supports, angles and brackets as furnished by manufacturer to form complete assemblies.

J. Remove roof panel and flashing protective film prior to extended exposure to sunlight, heat, and other weather elements.

K. Field-apply sealant tape and gun-grade sealant according to reviewed shop drawings and manufacturer's requirements for airtight, watertight installation.

L. Ensure sealant beads and tapes are applied prior to sheet metal installation to achieve a concealed bead. Neatly trim exposed portions of sealant without damaging roof panel or flashing finish.

M. Align pipe penetrations to occur at center of roof panel. Report and have corrected improperly-placed penetrations before proceeding with panel installation. Remove and replace roof panels which have improperly-placed penetration flashings.

N. Align roof curbs to fit roof panel module and overlap standing seam(s). Allow for proper drainage on both sides of curb.

O. Install sheet metal flashings according to manufacturer's recommendations, reviewed shop drawings and in accordance with provision of Section 07 62 00.

P. Seam the roof using an approved mechanical seamer. Seamer runs in both directions.

3.5 CLEANING

A. Clean exposed surfaces of work promptly after completion of installation.

B. Clean mud, dirt, and construction-related debris from panels before panels are scratched or marred.

3.6 PROTECTION

A. Protect Work as required to ensure roofing will be without damage at time of final completion.

B. Do not allow excessive foot traffic over finished surfaces.

C. Do not track mud, dirt, or construction-related debris onto panel surfaces.

D. Replace damaged Work before final completion.

END OF SECTION

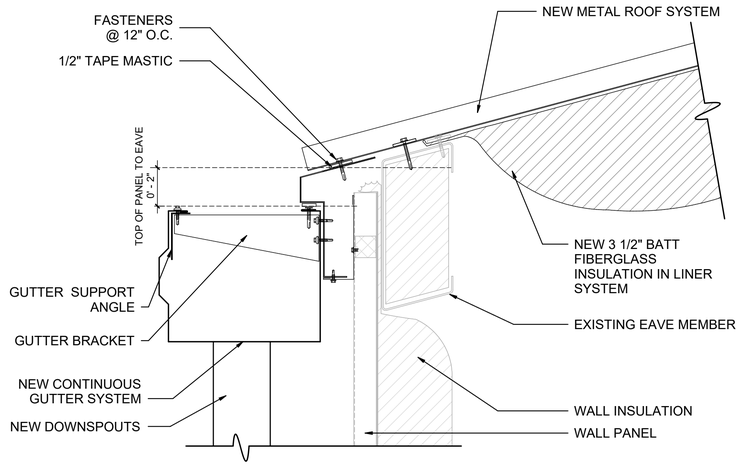

1 A5.01R EAVE GUTTER DETAIL
3" = 1'-0"

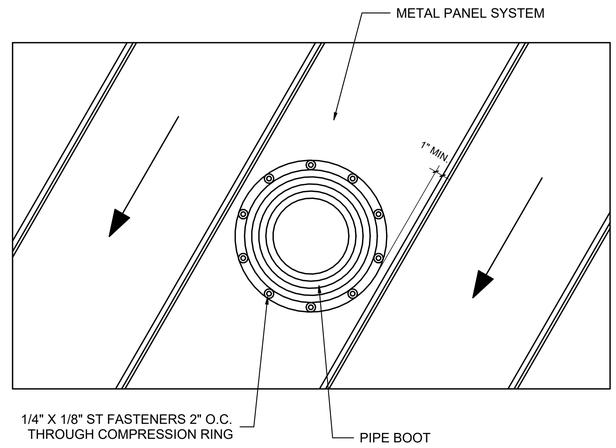

2 A5.01R METAL ROOF PIPE BOOT PLAN DETAIL
1 1/2" = 1'-0"

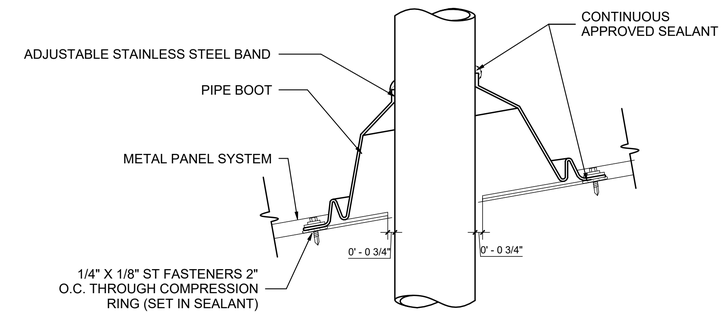

3 A5.01R METAL ROOF PIPE BOOT SECTION DETAIL
1 1/2" = 1'-0"

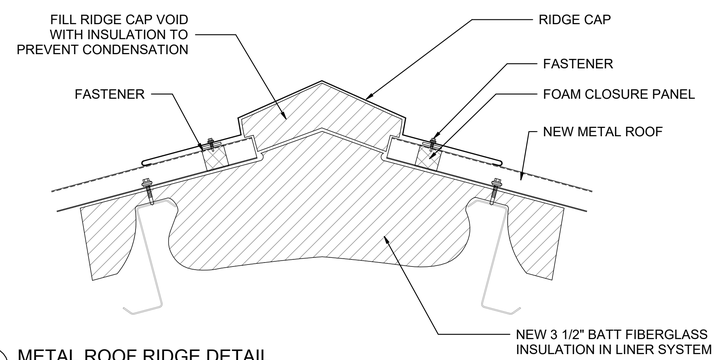

5 A5.01R METAL ROOF RIDGE DETAIL
3" = 1'-0"

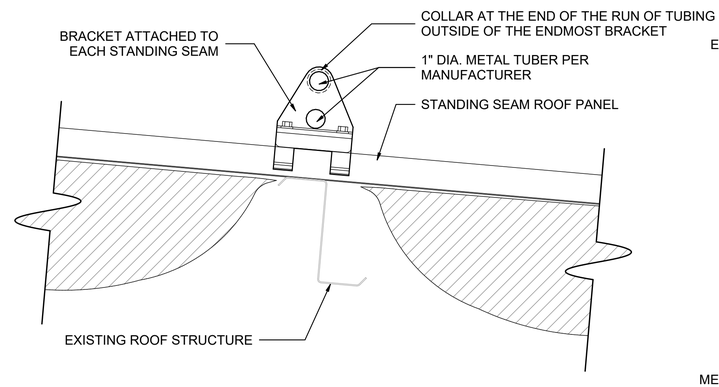

4 A5.01R SNOWGUARD CLAMP BRACKET
3" = 1'-0"

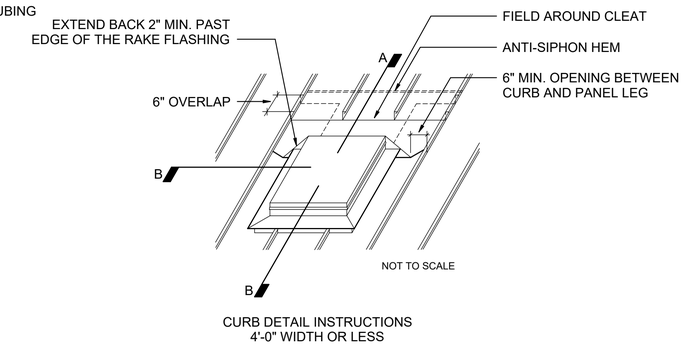

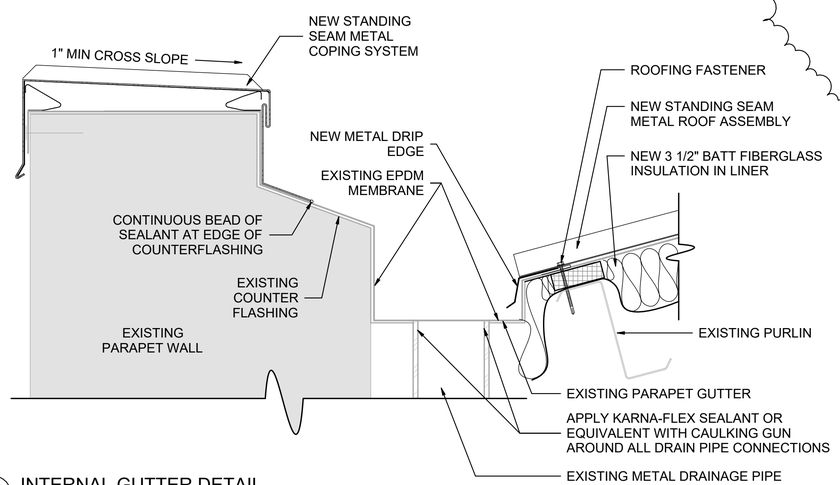

8 A5.01R INTERNAL GUTTER DETAIL
3" = 1'-0"

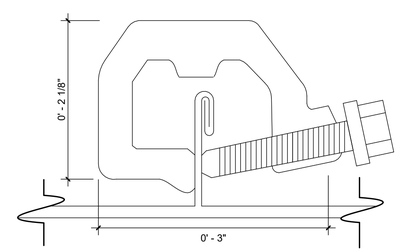

7 A5.01R SNOWGUARD CLAMP BRACKET ATTACHMENT
12" = 1'-0"

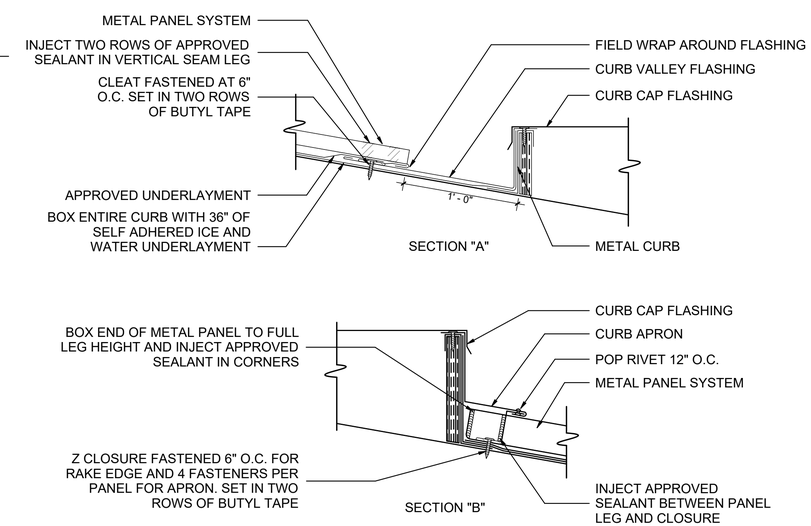

6 A5.01R METAL ROOF CURB DETAIL
1 1/2" = 1'-0"

THRASHER
600 WHITE OAKS BLVD.
P.O. BOX 940
BRIDGEPORT, WV 26330
P (304) 624-4108
F (304) 624-7831
www.thethrashergroup.com

NO.	BY	DATE	DESCRIPTION
1		Date 1	ADD #2 - NEW INSULATION IS PART OF THE BASE BID

FSU ROOF RENEWAL AEROSPACE
FAIRMONT STATE UNIVERSITY
1050 INDUSTRIAL RD. E, BRIDGEPORT, WV
2/25/2025
CONSTRUCTION DOCUMENTS

DRAWN: ZJH DATE: 2/25/2025
CHECKED: MLB DATE: 2/25/2025
PROJECT No. T60-11236

DETAILS

SHEET No. A5.01R

USER: ZJH
PLOT DATE/TIME: 3/12/2025 5:51:41 PM
R:\060\T60-11236.00 - Fairmont State University (WV) - Roof\Drawing\Revit\RCB AeroSpace Building Roof Replacement.rvt
LAYOUT TAB: DETAILS
CAD FILE: R:\060\T60-11236.00 - Fairmont State University (WV) - Roof\Drawing\Revit\RCB AeroSpace Building Roof Replacement.rvt